Constant and Balanced Functions

For 1-bit input, if $x \in \{0,1\}$

1. Constant function

A function is **constant** if it produces the **same output** for all possible inputs.

eg. $f(0) = f(1)$

$f(0) = 0, f(1) = 0$

$f(0) = 1, f(1) = 1$

2. Balanced function

A function is **balanced** if it produces an equal number of 0 and 1 as output for all possible inputs.

eg. $f(0) \neq f(1)$

$f(0) = 0, f(1) = 1$

$f(0) = 1, f(1) = 0$

Logic Gates

There will be some logic gates in Deutsch's Algorithm Circuit

1. NOT Gate

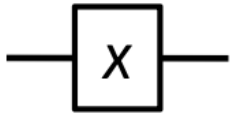

NOT gate (*X*) is a basic logic gate that inverts the input bit. If the input is 0, the output is 1.If the input is 1, the output is 0.

eg. $X\,|0\rangle = |1\rangle$

$X\,|1\rangle = |0\rangle$

Logic Gates

2. Hadamard Gate

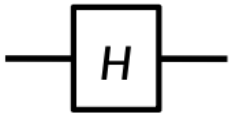

Hadamard gate (*H*) transforms a qubit into a superposition of the basis states $|0\rangle$ to $|+\rangle$ and $|1\rangle$ to $|-\rangle$.

eg. $H\,|0\rangle = 1/\sqrt{2}\,(|0\rangle + |1\rangle)$

$H\,|1\rangle = 1/\sqrt{2}\,(|0\rangle - |1\rangle)$

If Hadamard gate applies to $|+\rangle$ and $|-\rangle$, $H\,|+\rangle$ to $|0\rangle$ and $|-\rangle$ to $|1\rangle$

eg. $H\,|+\rangle = H\,(1/\sqrt{2}\,(|0\rangle + |1\rangle)) = |0\rangle$

$H\,|-\rangle = H\,(1/\sqrt{2}\,(|0\rangle - |1\rangle)) = |1\rangle$

Logic Gates

3. Phase Oracle Gate

Phase Oracle (U_f) is a **unitary operator** used in quantum algorithms to encode a function f(x) into the phase of quantum states. Unlike traditional oracles, which may modify the state directly (e.g., flipping a qubit), phase oracles leave the quantum state unchanged except for applying a **phase shift** based on the value of f(x).

Logic Gates

Phase Oracle Example

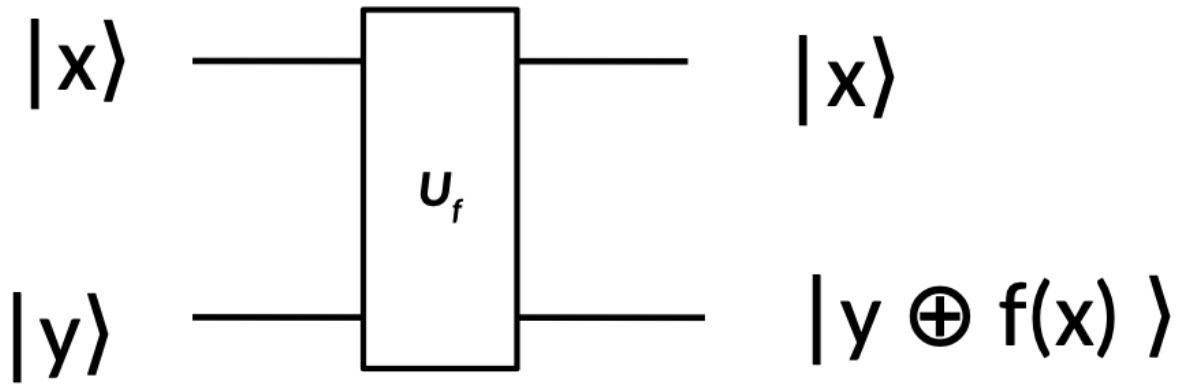

⊕ = binary sum, ⊗ = tensor product

$U_f\,|x\rangle \otimes |y\rangle = U_f\,|xy\rangle = |x\rangle \otimes |y \oplus f(x)\rangle$

If x= 1, y=1, $1 \oplus 1 = 0$

If x= 1, y=0 or x=0, y=1 , $1 \oplus 0 = 0 \oplus 1 = 1$

If x= 0, y=0, $0 \oplus 0 = 0$

Logic Gates

Phase Oracle Example

$|0 \oplus a\rangle - |1 \oplus a\rangle$

If a= 0, $|0\rangle - |1\rangle$
If a= 1, $|1\rangle - |0\rangle$
So to summarize this, it will become $\mathbf{(-1)^a\ (|0\rangle - |1\rangle)}$ for both a=0 and a=1.

Deutsch's Algorithm Circuit

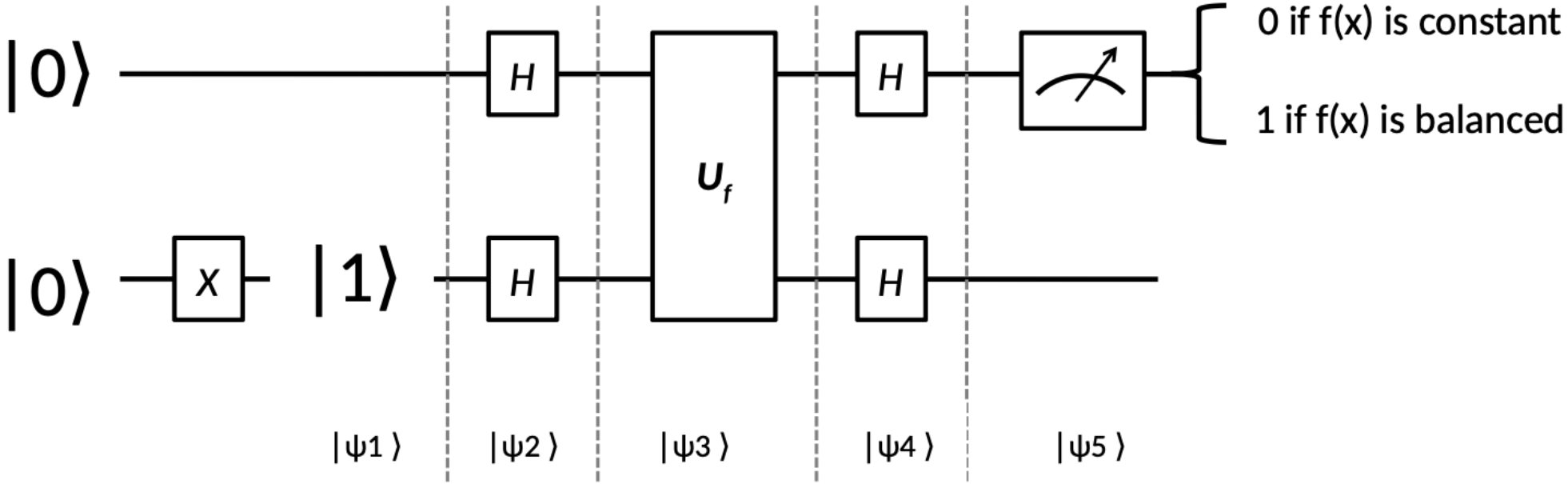

Detailed Calculation

1. Initialize Qubits

$|0\rangle|0\rangle$

$|0\rangle$ NOT $|0\rangle$

$|0\rangle$ $|1\rangle$ (initialization)

$$|\psi 1\rangle = |0\rangle \otimes |1\rangle$$

2. Apply Hadamard Gate

$$\begin{aligned} |\psi 2\rangle &= H\,|\psi 1\rangle \\ &= H\,|0\rangle \otimes H\,|1\rangle \\ &= 1/\sqrt{2}\,(|0\rangle + |1\rangle) \otimes 1/\sqrt{2}\,(|0\rangle - |1\rangle) \\ &= 1/2\,(\,|00\rangle - |01\rangle + |10\rangle - |11\rangle\,) \end{aligned}$$

Detailed Calculation

3. Apply Phase Oracle *Uf*

$|\psi 3\rangle = U_f \, |\psi 2\rangle$

$= 1/2 \, (\, |0\rangle \, |0 \oplus f(0)\rangle - |0\rangle \, |1 \oplus f(0)\rangle + |1\rangle \, |0 \oplus f(1)\rangle - |1\rangle \, |1 \oplus f(1)\rangle \,)$

$= 1/2 \, (\, |0\rangle \, (\, |0 \oplus f(0)\rangle - |1 \oplus f(0)\rangle \,) + |1\rangle \, (\, |0 \oplus f(1)\rangle - |1 \oplus f(1)\rangle \,) \,)$

Observation

$= 1/2 \, (\, |0\rangle \, (-1)^{f(0)} \, (\, |0\rangle - |1\rangle \,) + |1\rangle \, (-1)^{f(1)} \, (\, |0\rangle - |1\rangle \,) \,)$

$= 1/2 \, (\, |0\rangle \, (-1)^{f(0)} + |1\rangle \, (-1)^{f(1)} \,) \, (\, |0\rangle - |1\rangle \,)$

$= 1/\sqrt{2} \, (\, |0\rangle \, (-1)^{f(0)} + |1\rangle \, (-1)^{f(1)} \,) \otimes 1/\sqrt{2} \, (\, |0\rangle - |1\rangle \,)$

4. Apply Hadamard Gate (Hadamard gate applies to $|+\rangle$ and $|-\rangle$)

$|\psi 4\rangle = H \, |\psi 3\rangle$

Detailed Calculation

Case 1 : if f(0) = f(1), f is constant

Sub-case 1: f(0) = f(1) = 0

$$
\begin{aligned}
|\psi 4\rangle &= H\, 1/\sqrt{2}\, (\, |0\rangle\, (-1)^{f(0)} + |1\rangle\, (-1)^{f(1)}\,) \otimes H\, 1/\sqrt{2}\, (\, |0\rangle - |1\rangle\,) \\
&= H\, 1/\sqrt{2}\, (\, |0\rangle\, (-1)^{0} + |1\rangle\, (-1)^{0}\,) \otimes H\, 1/\sqrt{2}\, (\, |0\rangle - |1\rangle\,) \\
&= H\, 1/\sqrt{2}\, (|0\rangle + |1\rangle) \otimes H\, 1/\sqrt{2}\, (|0\rangle - |1\rangle) \\
&= |0\rangle\, |1\rangle
\end{aligned}
$$

Case 2 : if f(0) = f(1) = 1, f is constant

Sub-case 2: f(0) = f(1) = 0

$$|\psi 4\rangle = -\, |0\rangle\, |1\rangle$$

Detailed Calculation

Case 3 : if $f(0) \neq f(1)$, f is balanced

Sub-case 3: $f(0) = 0$, $f(1) = 1$

$$
\begin{aligned}
|\psi 4\rangle &= H\, 1/\sqrt{2}\, (\, |0\rangle\, (-1)^{f(0)}\,) + |1\rangle\, (-1)^{f(1)}) \otimes H\, 1/\sqrt{2}\, (\, |0\rangle - |1\rangle\,) \\
&= H\, 1/\sqrt{2}\, (\, |0\rangle\, (-1)^{0} + |1\rangle\, (-1)^{1}\,) \otimes H\, 1/\sqrt{2}\, (\, |0\rangle - |1\rangle\,) \\
&= H\, 1/\sqrt{2}\, (|0\rangle - |1\rangle) \otimes H\, 1/\sqrt{2}\, (|0\rangle - |1\rangle) \\
&= |1\rangle\, |1\rangle
\end{aligned}
$$

Case 4 : if $f(0) \neq f(1)$, f is balanced

Sub-case 4: $f(0) = 1$, $f(1) = 0$

$$|\psi 4\rangle = -\, |1\rangle\, |1\rangle$$

Detailed Calculation

5. Measurement

$|\psi 5\rangle$ = if first qbit is $|0\rangle$, f(x) is constant
if first qbit is $|1\rangle$, f(x) is balanced
(Note: Please ignore the +/- sign)

Application Code

```
import qiskit
import math from qiskit
import QuantumCircuit, QuantumRegister, transpilefrom qiskit.visualization
import plot_histogramfrom qiskit_aer
import AerSimulatorfrom qiskit.quantum_info
import Statevector

def oracle(n, is_balanced):
    qc = QuantumCircuit(n+1, name = 'oracle')
    if is_balanced:
        for qubit in range(n):
            qc.cx(qubit, n)
    else:
        qc.x(n)
    return qc


n = 1
oracle_circuit = oracle(n, is_balanced=False)
```

Application Code

```
qc = QuantumCircuit(n+1, n)
qc.x(n)
qc.barrier()

for i in range(n+1):
   qc.h(i)

qc.append(oracle_circuit, range(n+1))

for i in range(n+1):
   qc.h(i)

qc.barrier()

for qubit in range(n):
   qc.measure(qubit, qubit)

qc.save_statevector()
qc.draw('mpl')
```

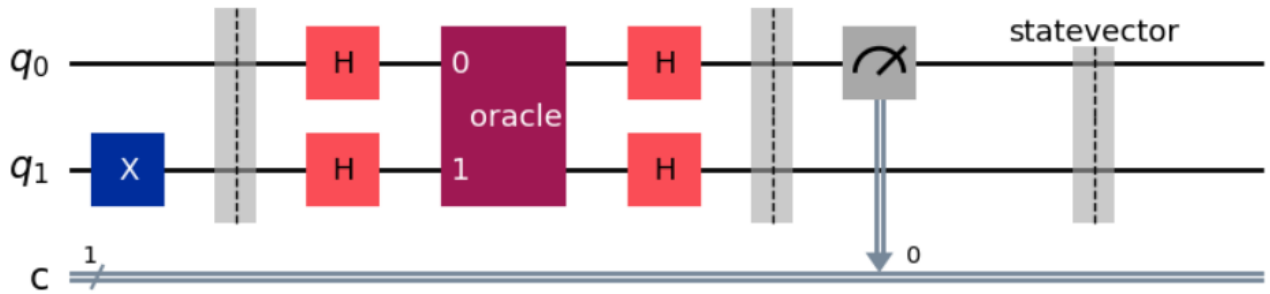

Application Code
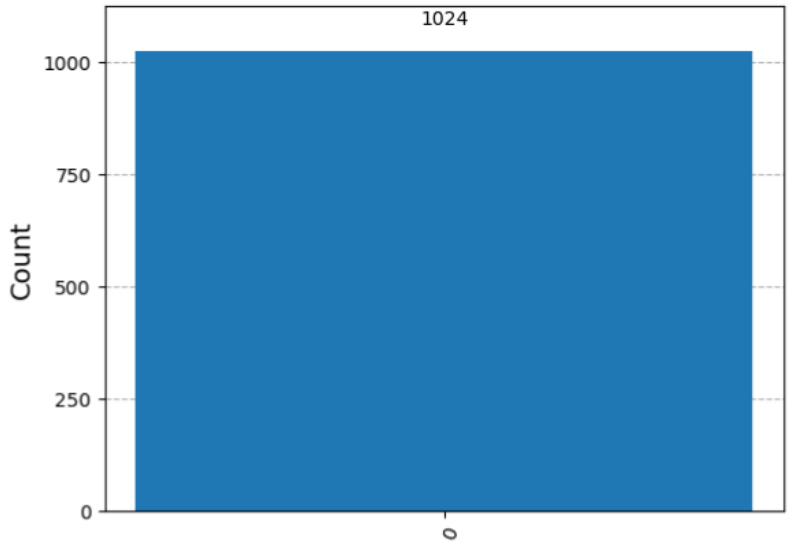
```
simulator = AerSimulator()

qc = transpile(qc,simulator)
result = simulator.run(qc, shots = 1024).result()
counts = result.get_counts()

plot_histogram(counts)
```